Dimensions

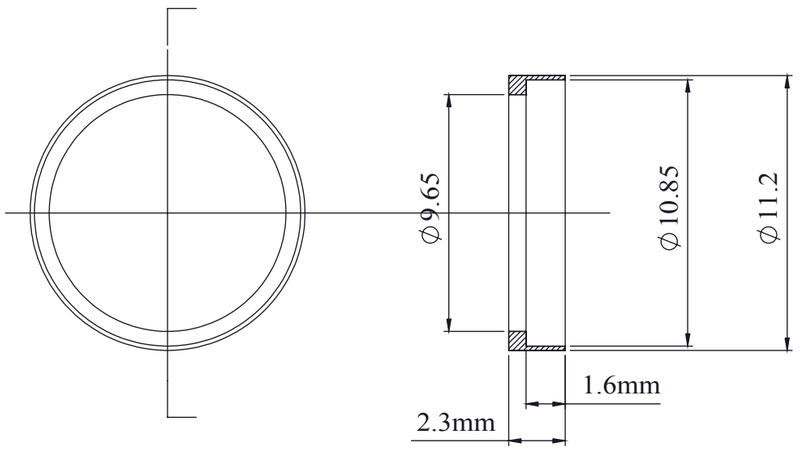

ORDER No	COLOUR
343-0100	BLACK
343-0200	BLUE
343-0400	GREEN
343-0500	RED
343-0600	WHITE
343-0700	YELLOW

Tel No.+44(0)1724273200 Website www.dem-uk.com

PROPRIETARY AND CONFIDENTIAL
THE INFORMATION CONTAINED IN THIS DRAWING IS THE SOLE PROPERTY OF **ALPHA 3 MANUFACTURING**.
ANY REPRODUCTION IN PART OR AS A WHOLE WITHOUT THE WRITTEN PERMISSION OF **ALPHA 3 MANUFACTURING** IS PROHIBITED.

DEM Manufacturing, Deltron Emcon House
Hargreaves Way, Sawcliffe Ind. Park,
Scunthorpe, North Lincolnshire, DN15 8RF, UK

UNLESS OTHERWISE SPECIFIED:
DIMENSIONS ARE IN MILLIMETRES
LINEAR TOLERANCE:
NO DECIMAL PLACES ±0.5mm
1 DECIMAL PLACE ±0.25mm
2 DECIMAL PLACES ±0.125mm
ANGULAR TOLERANCE: ±1°

FINISH .
.
.

DEBURR AND BREAK SHARP EDGES

IF IN DOUBT ASK
DO NOT SCALE DRAWING

MATERIAL -

DRAWN BY SW
APPROVED BY WC
THIRD ANGLE PROJECTION
SHEET 1 OF 1
SCALE 1:1
A3

TITLE GENERAL SPECIFICATIONS FOR 343 SERIES PHONO IDENTIFICATION RING

DRAWING NO. 343 Series

ISSUE 01
Release